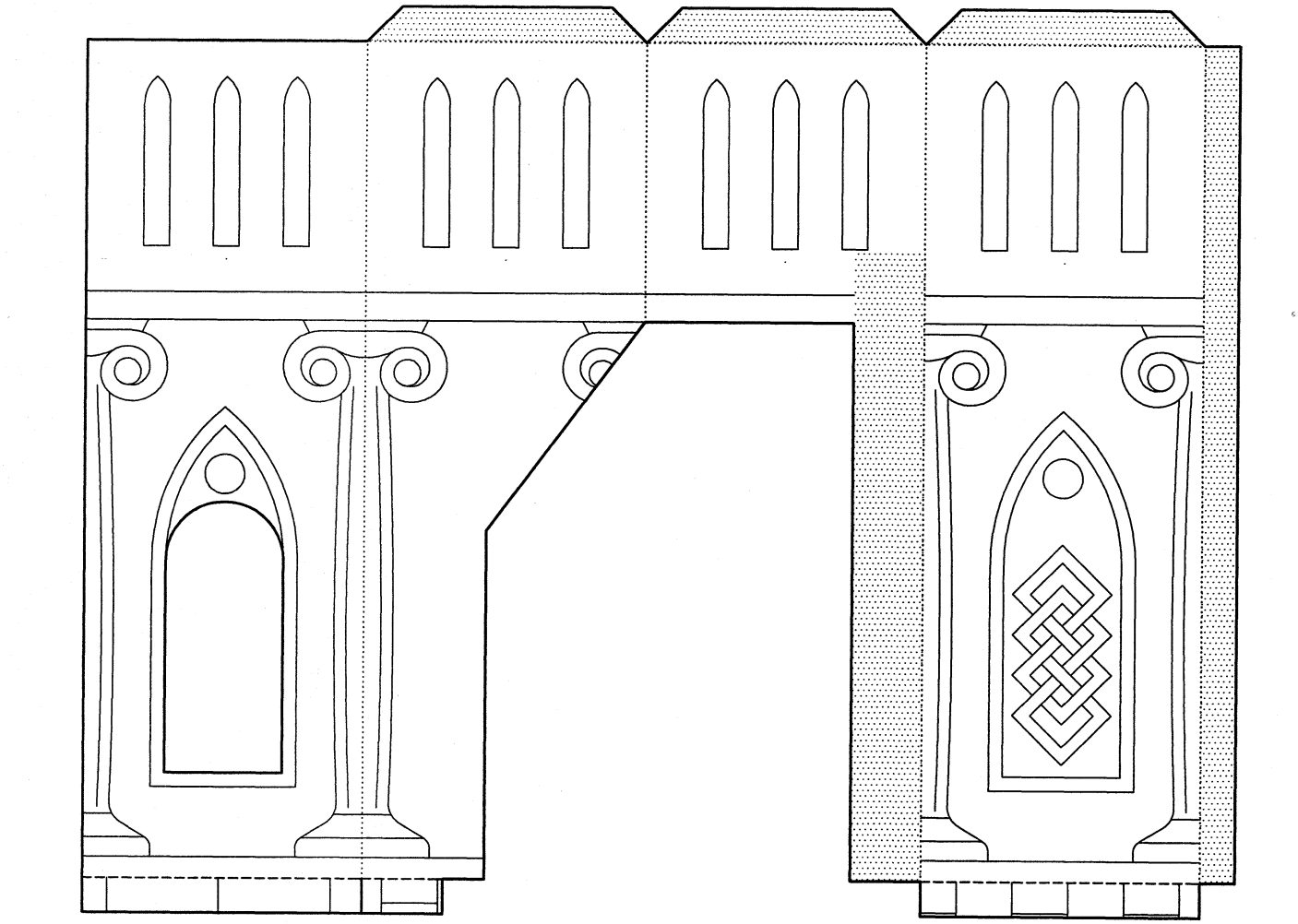

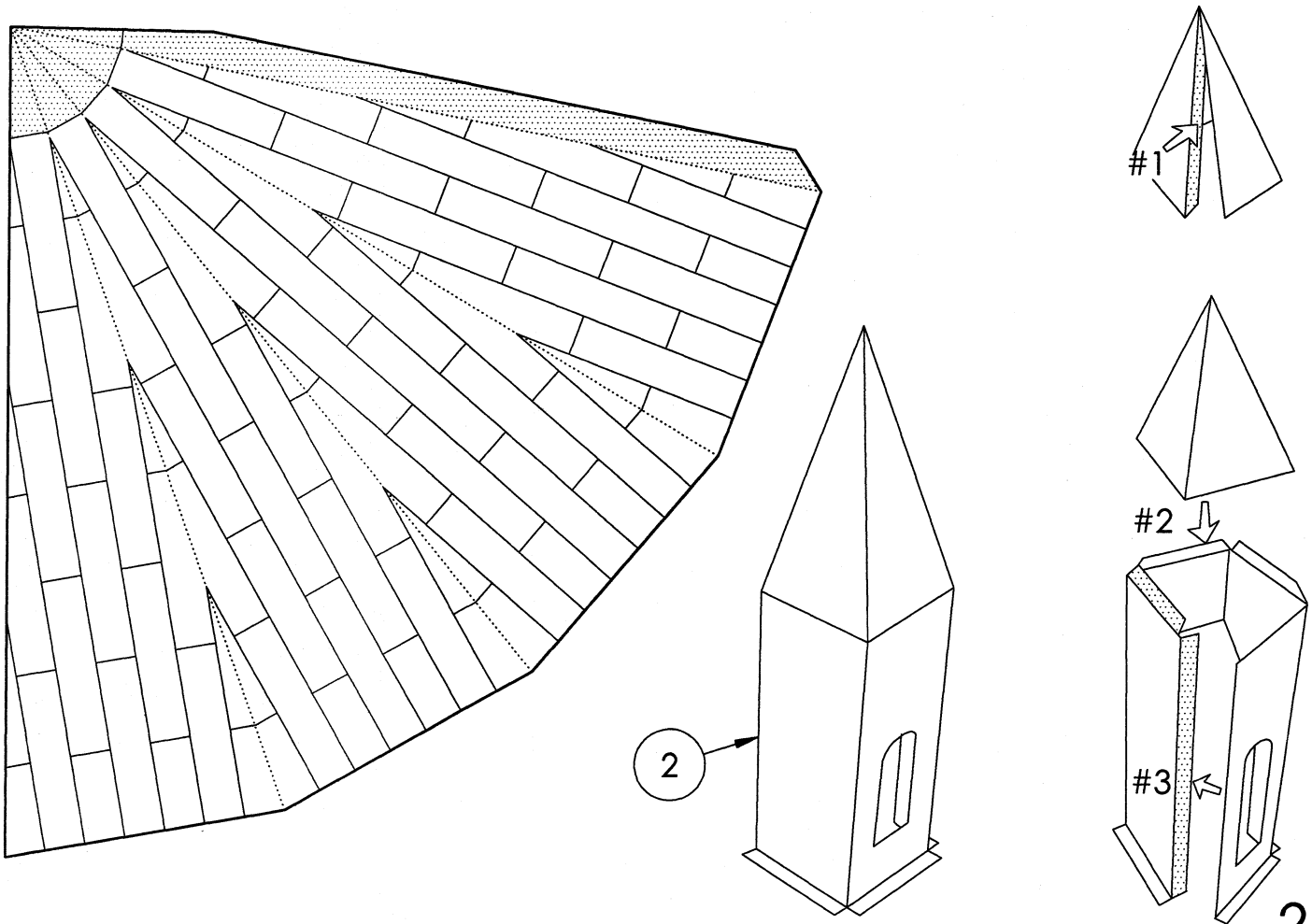

A.2.02 Copyright © 2021 Finn Schmidt, finnschmidt.com. For personal use only. Do not use commercially, or post on other websites.